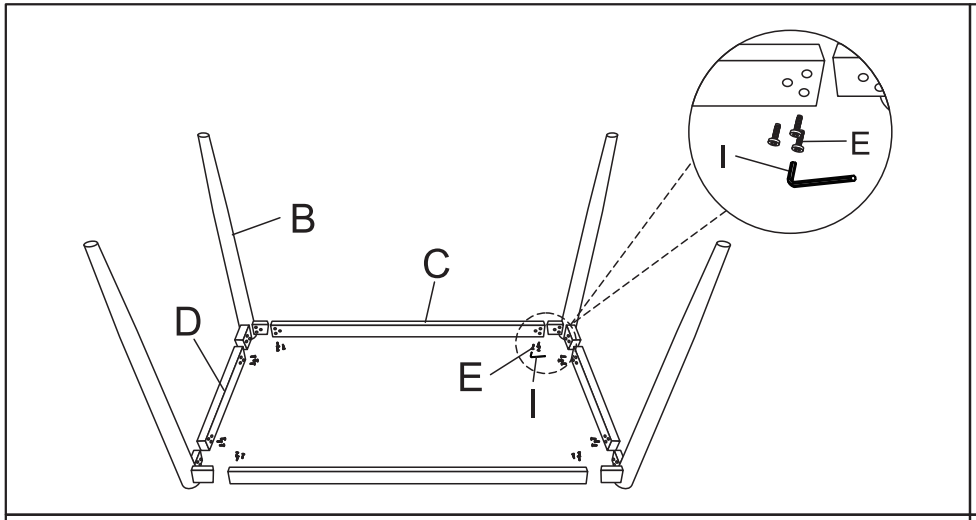

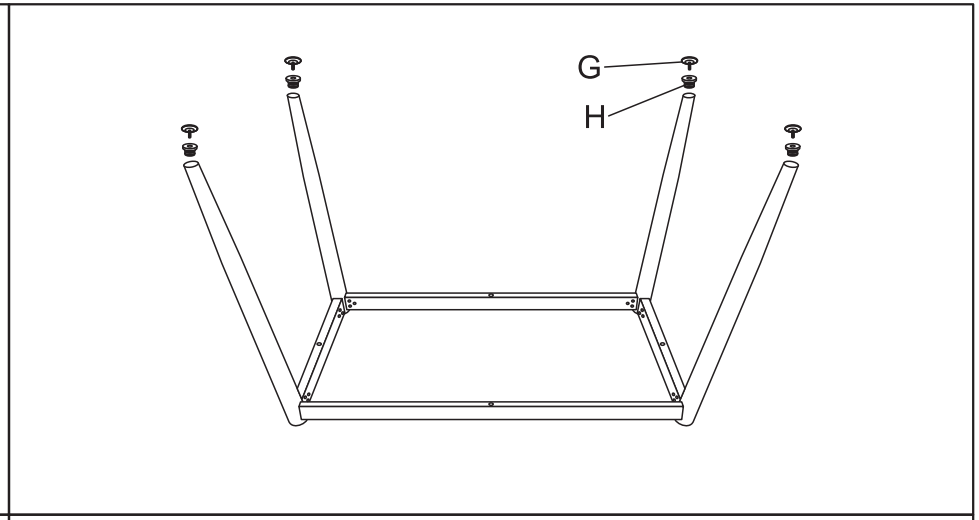

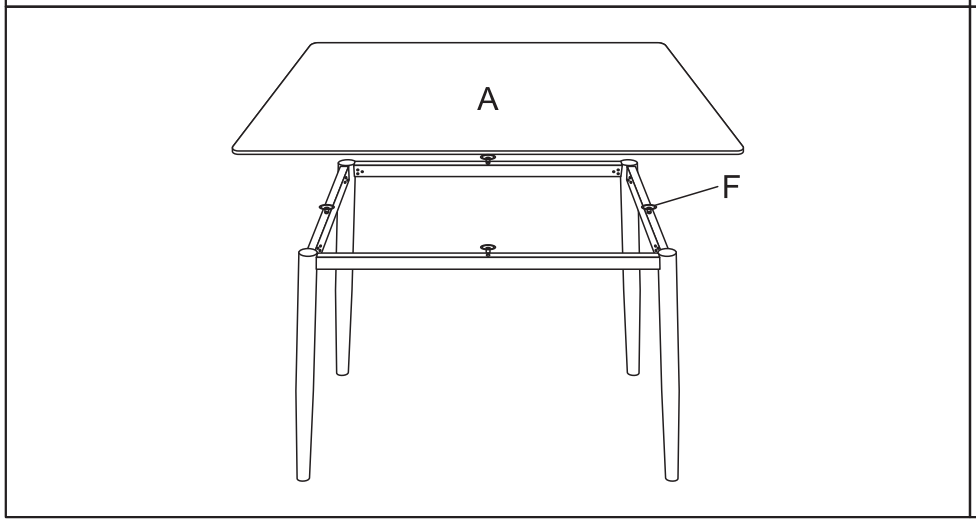

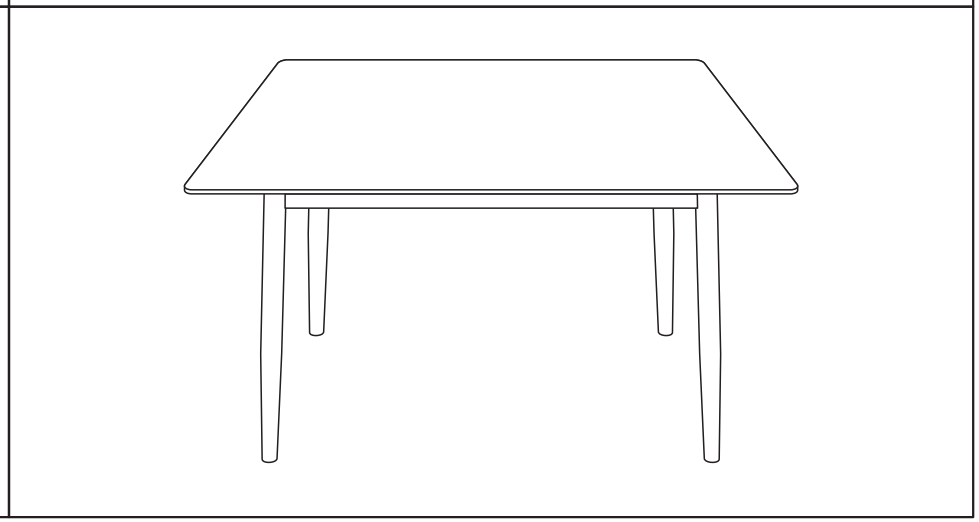

A	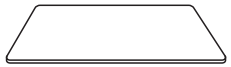	1PC	B	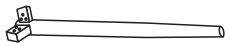	4PCS	C	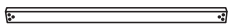	2PCS	D		2PCS
E	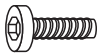	24PCS	F		4PCS	G		4PCS	H		4PCS
I		1PC									